21/06/24. M/S

USN | | | | | | | | | | [23TCSE209]

SECOND SEMESTER B.Tech EXAMINATION, JUNE- 2024

ELECTRICAL AND ELECTRONICS FOR COMPUTATIONAL THINKING

Time: 3 Hours **Maximum Marks: 100**

Instructions: i. Missing data may be suitably assumed.

ANSWER ALL QUESTIONS

		PART-A		**5 X 2=10**	
1.	**a**	Explain Power Factor with an Example(Assume Leading Load)?	L2	**CO2**	**2M**
	b.	Write the equivalent circuit if 3 resistor connected in parallel.	L1	**CO2**	**2M**
	c.	Define Ohm's Law with Suitable Example?	L1	**CO1**	**2M**
	d.	Calculate the power of the given signal, x(t)=4 $\cos\frac{\pi}{3}t$.	L3	**CO3**	**2M**
	e.	List the Advantages and Disadvantages of Digital Image Processing?	L1	**CO3**	**2M**
		PART- B		**6X5=30**	
2.	**a.**	Define Node and Principle Node. Identify the Number of Principle and Simple Nodes from the following circuit, 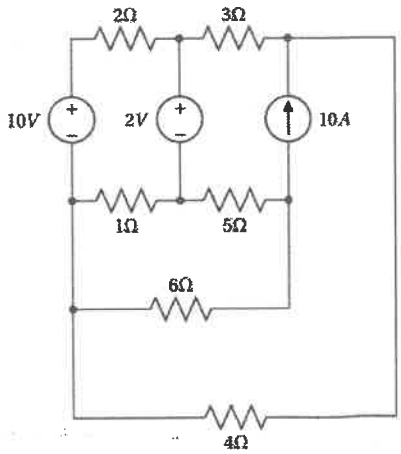	L3	**CO2**	**5M**
		OR			
	b.	Explain Active and Passive elements. Mention it's applications .	L1	**CO2**	**5M**

3.	a.	A Voltage source $V(t)=\frac{5}{\sqrt{2}}\sin(314t+20)$ connected to an AC Circuit which carries a current of $I(t)=10\sin(314t-40^0)$. Calculate the Reactive power developed in the circuit.	L3	CO3	5M
		OR			
	b.	Consider $V(t)=10\sin(4t+60^0)$ and $I(t)=-10\cos(4t-30)$ Calculate the Phase angle using graphical method also calculate the active power?	L3	CO3	5M
4.	a.	Draw the block diagram of the closed loop control system and describe the requirements of the control system?	L2	CO6	5M
		OR			
	b.	Define digital image processing. Mention the applications of Digital Image Processing.	L2	CO5	5M
5.	a.	Calculate the Power Loss across the Resistor connected between terminals A and B , voltage across the 5 ohm resistor as shown below, 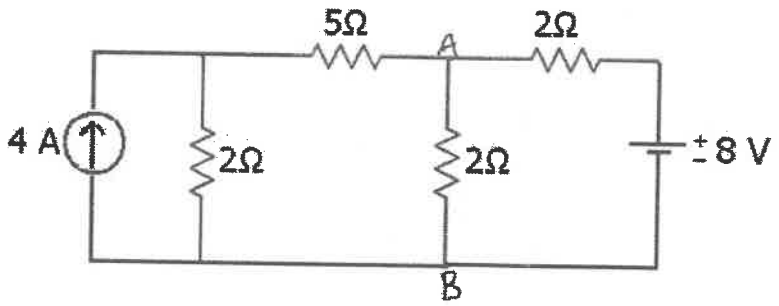	L3	CO2	5M
		OR			
	b.	Illustrate the Single-phase AC source is connected across the R-L circuit and also draw the Phasor Diagram.	L3	CO2	5M
6.	a.	Illustrate V-I characteristics of resistor.	L2	CO1	5M
		OR			
	b.	Define Periodic and Aperiodic Signals. Calculate the Time period of the following signal, $x(t)=\cos\frac{\pi}{3}t+\sin\frac{2\pi}{3}t.$	L3	CO3	5M
7.	a.	Describe Active, Reactive and Apparent Power.	L2	CO2	5M

		OR			
	b.	Differtiate between continuous time and discrete time signals.	L3	**CO3**	**5M**
		PART-C		**6X10=60**	
8.	**a.**	The equivalent resistance between the terminals A and B is for the given circuit, 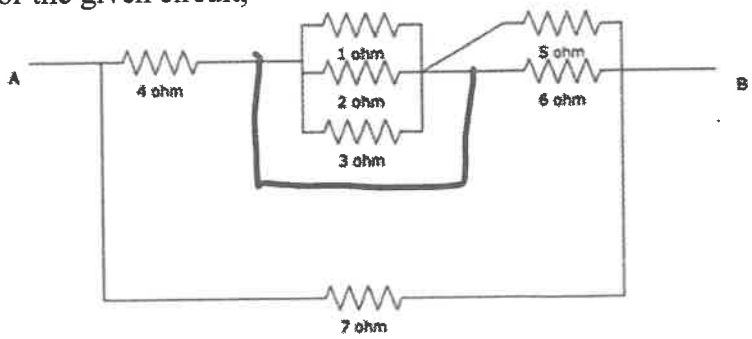	L3	**CO2**	**10M**
		OR			
	b.	Analyze the Single-phase AC source is connected across the R-L-C circuit and also draw the Phasor Diagram? Note: Consider both LEAD and LAG condition.	L3	**CO2**	**10M**
9.	**a.**	Calculate the Power Dissipated in 6Ω Resistor and Voltage across the 2Ω from the following circuit using KVL. 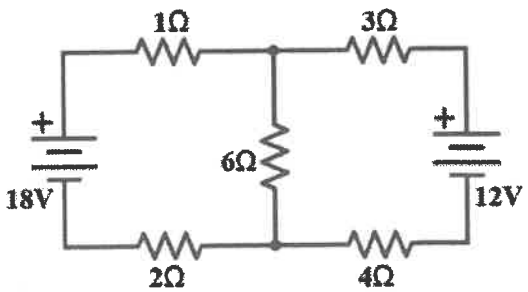	L3	**CO2**	**10M**
		OR			
	b.	Explain about the Image Formation in human eye with neat diagram.	L2	**C05**	**10M**
10.	**a.**	Describe about the even and odd signals with suitable examples?	L3	**C04**	**10M**

		OR			
	b.	Draw the block diagram of image processing system and explain about each component.	L4	**CO4**	**10M**
11.	**a.**	Illustrate the Air Conditioning System with neat diagram?	L4	**CO6**	**10M**
		OR			
	b.	Explain about the basic concepts of the control system?	L3	**CO6**	**10M**
12.	**a.**	Draw the block diagram of Electric Clothes Drier System and explain about the each component in it?	L4	**CO6**	**10M**
		OR			
	b.	The current flowing through a Resistor is as shown below, 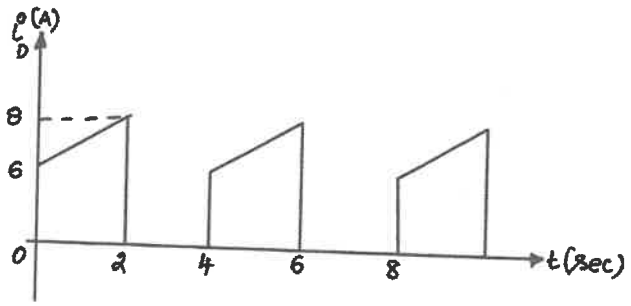 Calculate the power dissipated across the Resistor 1k Ω.	L3	**CO2**	**10M**
13.	**a.**	Explain about the KCL and KVL systems with suitable examples.	L2	**CO2**	**6M**
		OR			
	b.	a) Describe types of Voltage Sources (Both Independent and Dependent) with suitable diagrams? b) The potential difference between the terminals A and B is____. 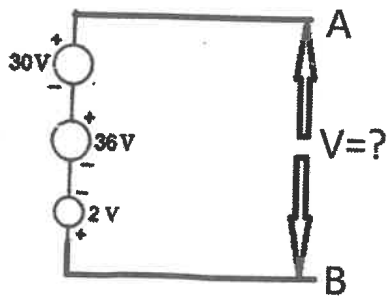	L3		**10M**